29236E

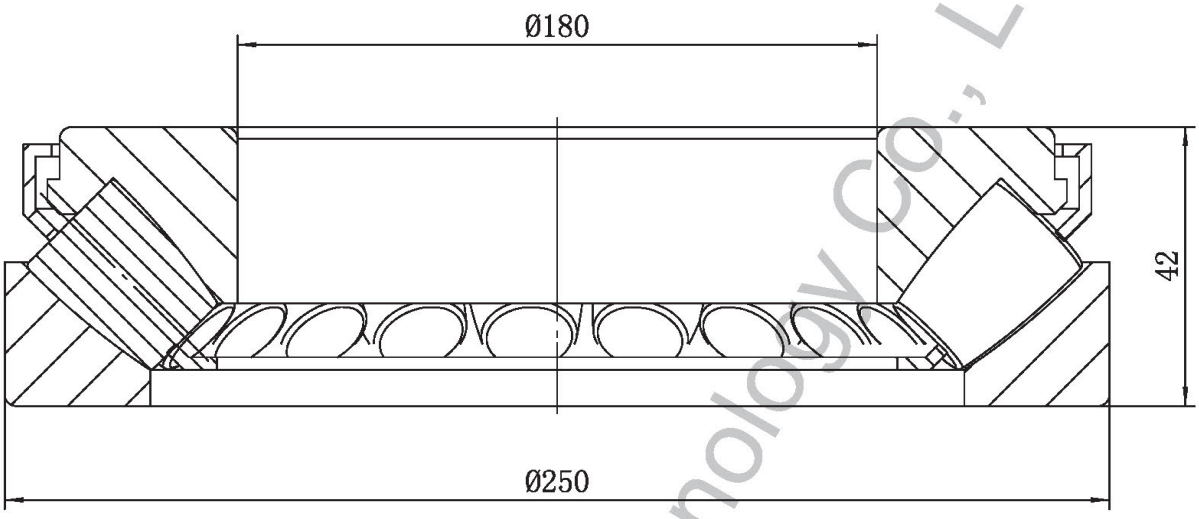


1 rated load: Cr= 420 KN ; Cor= 1900 KN ;

2 Heat treatment according to the current standards

Remark:

1. Luoyang JCB Bearing Technology Co., Ltd is a technical Inc, specialize in designing and manufacturing thrust bearing, we can design and manufactur all kinds of thrust bearing according to client's requirement.
2. This drawing is reference for user, if you need formal drawing, please contact wth us sales@jcb-bearing.com, the official drawing will be submitted after order confirmation.

| serial | Name | Qty | Material | | | |
|---|---|---|---|---|---|---|
| 07 | cage | | STEEL | | | |
| 04 | roller | | steel GCr15-GB/T18254 | | | |
| 02 | shaft washer | | steel GCr15SiMn-GB/T18254 | | | |
| 01 | house washer | | steel GCr15SiMn-GB/T18254 | | | Weight (kg) |
| | | | | | | 6.30 |

Thrust spherical roller bearing

29236E

Add: No.3 Lianmeng road, Luoyang, Henan, China.
Postal: 471003
Phone: +86-379-68611678
Fax: +86-379-68611679
E-mail: sales@jcb-bearing.com
Website: www.jcb-bearing.com
www.sphericalrollerthrustbearing.com

Luoyang JCB Bearing Technology Co., Ltd

Luoyang JCB Bearing Technology Co., Ltd